HEAT&GLO™

ST-HVBI

See-Through Gas Log Fire

ST-HVBI AUB SPECIFICATIONS

MODEL	HEIGHT		WIDTH		DEPTH		VIEWING AREA	mjh INPUT	kWh OUTPUT
	Actual	Framing	Actual	Framing	Actual	Framing			
ST-HVBI-AUB	1067	1080	1184	1210	610	586	816 x 456	NG 44 LPG 43	NG 8.6 LPG 8.4

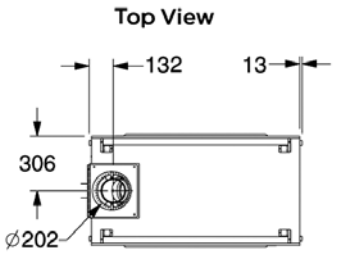

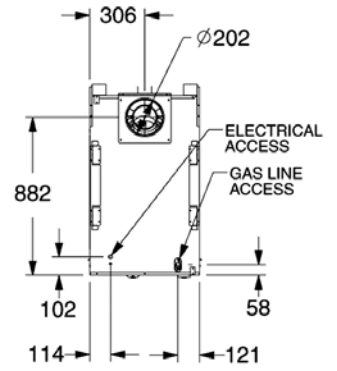

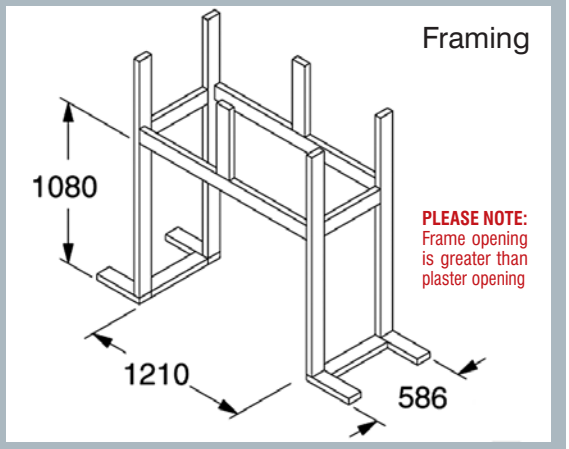

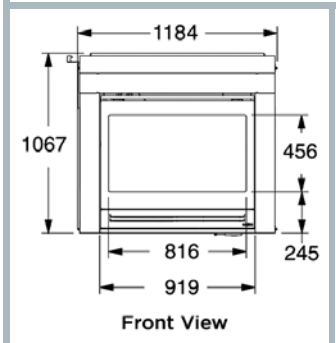

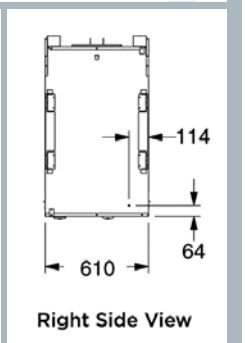

Dimensions above are in millimetres and for reference only. We recommend measuring individual units at installation. Refer to installation manual for detailed specification on installing this product.
Heat & Glo reserves the right to update units periodically. The flame appearance may vary based on the type of fuel burned and the venting configuration used. Photos in this brochure may vary in colour and dimension (size) from the actual product.

ST-HVBI with 4 sided stainless steel trim

ST-HVBI with 3 sided stainless steel trim

See-Thru Features

- Top or rear venting options (205mm diameter)
- Zero Clearance provides ease of installation and cost savings
- IntelliFirePlus™ Ignition System reduces gas consumption and lowers operating costs
- Variable valve allows you to adjust the flame height and heat output
- Realistic ceramic fibre Campfyre style logs
- Enjoy the ambience of a fire from two rooms
- Balanced Flue technology provides a sealed combustion chamber, maintaining optimum indoor air quality
- Energy saving 70% efficiency with the authenticity of a traditional fire
- Standard dress guard with mesh provides clean lines and safety
- 3 speed fan with auto on/off
- Full-function remote control to make controlling the fire easier - features an LCD screen, temperature, flame height and fan and timer control
- Approval number GSCS20165

NOW AVAILABLE with the iGloo App for total control!

Now you can control your Heat & Glo balanced flue gas fireplace from your smart device with the innovative **iGloo App.** Download now from the App Store or Windows Store.

iGloo Home Energy Control

CUTTING EDGE TECHNOLOGY, CONTROL & PERFORMANCE!

Download on the App Store | Download from Windows Store | WiFi | Bluetooth

SCAN THIS QR CODE TO LEARN MORE ABOUT iGLOO

Please contact us at:

JETMASTER HEAT & GLO

444 Swan Street (near Burnley St), Richmond

Ph: 1300 195 482

EMAIL: info@jetmastervic.com.au

WEB: www.jetmastervic.com.au

IntelliFire Plus™ Ignition System

The IntelliFire Plus™ Ignition System is an "intelligent" control system providing energy conservation and the comfort of a roaring fire, all at your fingertips! IntelliFire Plus™ eliminates the need for a continuously burning pilot light, reducing gas consumption and lowering operating costs.

IntelliFire™ Plus

Balanced Flue Gas Fireplace

The Heat & Glo balanced flue gas fireplace is a completely sealed system, drawing 100% of combustion air from outdoors and exhausting all combustion byproducts back outside, whilst maintaining optimum indoor air quality. Cold air drafts are eliminated and heat output is maximised. With the option of venting either from the top or rear (Heat & Glo's TR technology), even greater placement flexibility is possible, and the variable valve allows you to adjust the flame height and heat output.

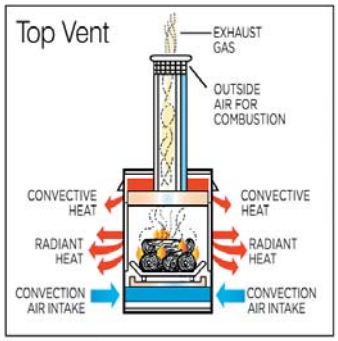

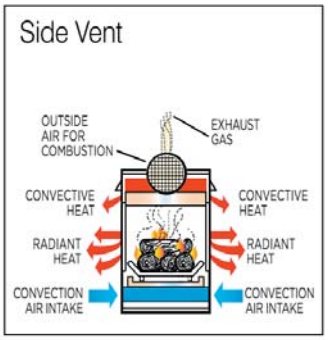

HEAT & GLO
No one builds a better fire

Jetmaster EST 1950